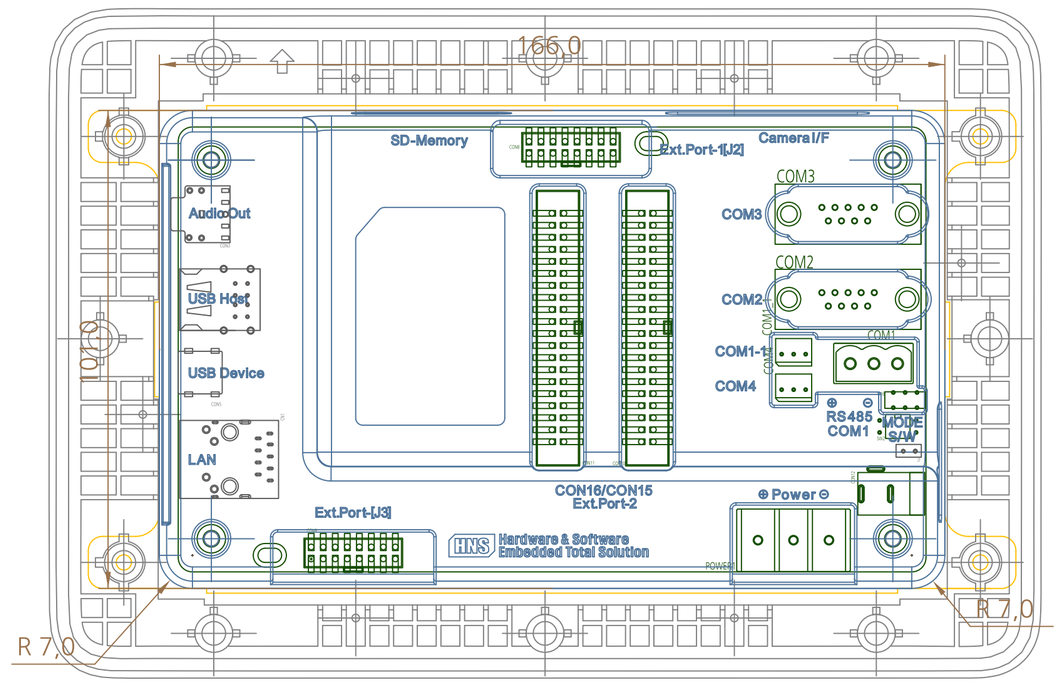
166,0
101,0
R 7,0
R 7,0
SD-Memory
Ext.Port-1[J2]
Camera I/F
Audio Out
USB Host
USB Device
LAN
COM3
COM2
COM1-1
COM4
RS485
COM1
MODE S/W
CON16/CON15
Ext.Port-2
Ext.Port-[J3]
Power
Hardware & Software
Embedded Total Solution

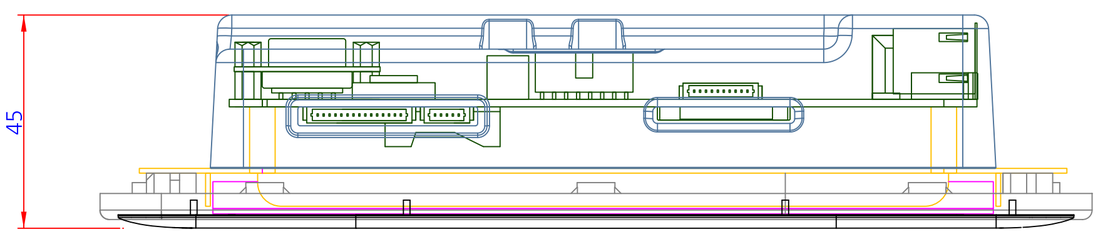
45

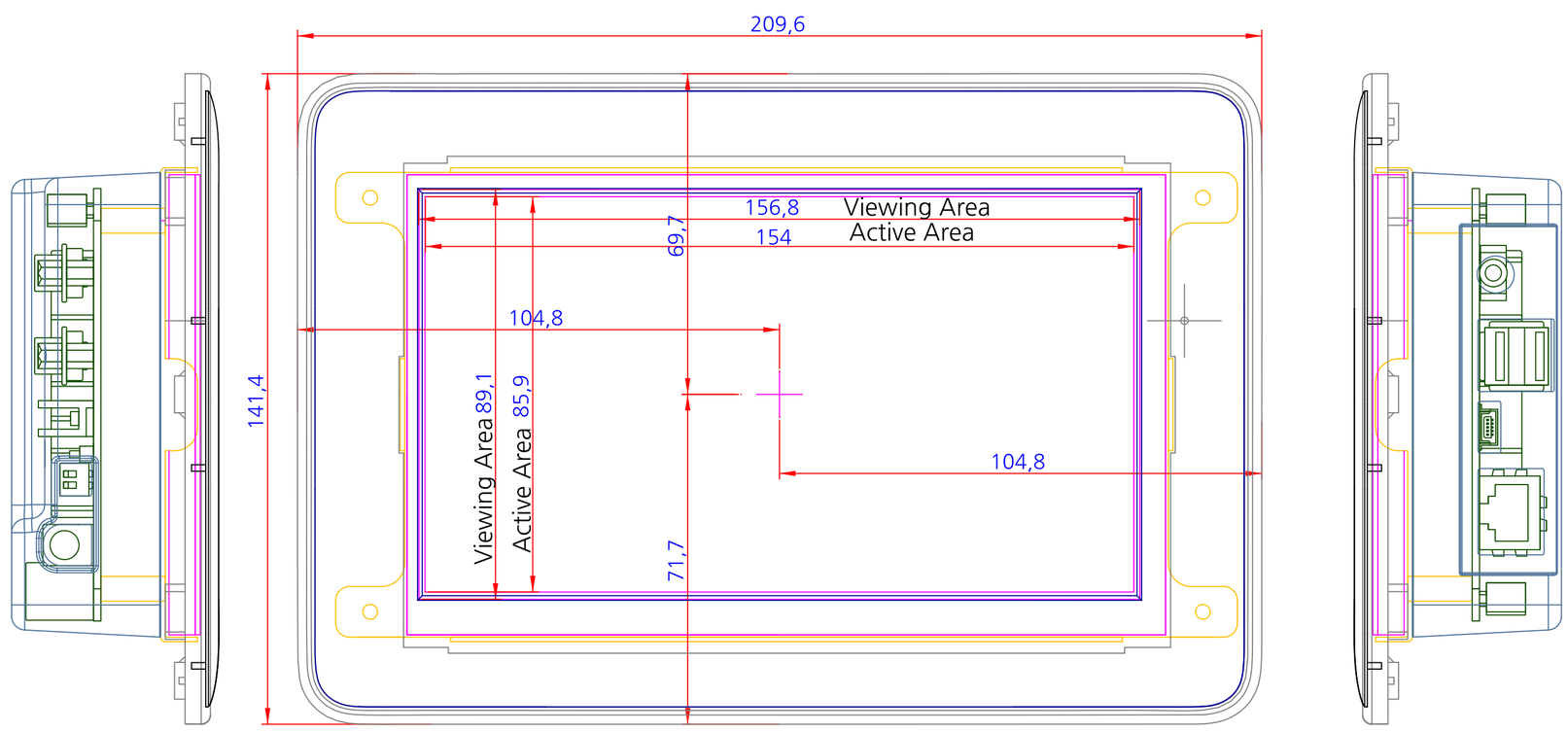
209,6
156,8
Viewing Area
154
Active Area
69,7
104,8
104,8
141,4
Viewing Area 89,1
Active Area 85,9
71,7

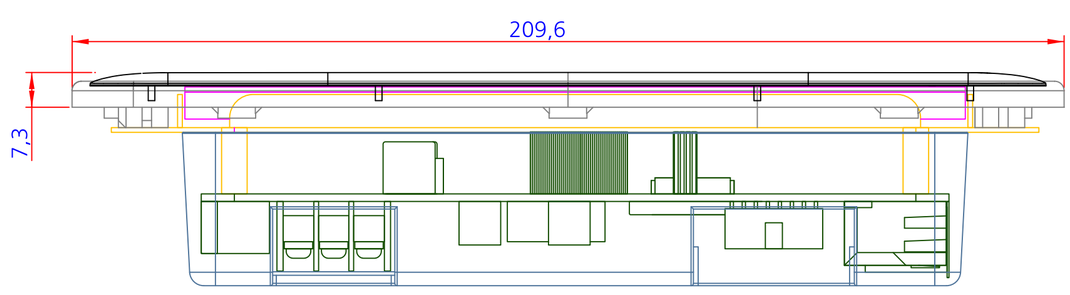
209,6
7,3